 © Copyright Gatemaster 2026

SUPERLOCK 2.0 KEYED LATCH DEADLOCK

5-Year Warranty **Universal Handing**

Adjustable latchbolt



Suitable for metal gate frames. For wooden gates, our surface-mounted option is available.

INCLUDED IN THE BOX

- 2.5mm hex key + 3mm hex key
- 2 x M8 fixing bolts
- Face plate
- Latchbolt
- Strike plate (2 x self-drilling fasteners)
- A set of keys (3
- A set of handles

MADE IN BRITAIN

Convenient, everyday latch access with the added security of a deadlock in one slim bolt-on lock. The Bolt-On Latch Deadlock combines convenient handle-operated access for daily use with keyed deadlocking when extra security is needed.

Product code	Description
BLD1030P	To fit 10-30mm (3/8" to 1 1/8") gate frames with plain handles
BLD1030T	To fit 10-30mm (3/8" to 1 1/8") gate frames with traditional handles
BLD4060P	To fit 40-60mm (1 5/8" to 2 3/8") gate frames with plain handles
BLD4060T	To fit 40-60mm (1 5/8" to 2 3/8") gate frames with traditional handles
Available in:	Black RAL9005 Moss Green RAL6005

HELP & SUPPORT

UK: +44 1243 558580 US: +1 214 872 9687

www.gatemasterlocks.com support@gatemasterlocks.com

WHAT DOES LATCH DEADLOCK MEAN?

Lock Type	What happens when the gate closes?	What do I need to do next to lock the gate?	Best for:
Latch Deadlock	Latches shut automatically, but doesn't lock	Use the key if you want to lock the gate	Best for convenience, when you want the gate to catch and open conveniently with the handle, then choose when to fully lock it.

TECHNICAL SPECIFICATIONS

Lock type	Keyed gate lock
Handles supplied	Yes, plain lever handle set (P) or traditional lever handle set (T)
Handing	Universal
Latchbolt throw	15mm (5/8"), when deadlocked 30mm (1 1/4")
Lock case width	70mm (2 3/4")
Fixing method	3-hole drilling. Bolt-on
Fixings included	Yes
Warranty	5 years
Compatible Keeps	BSK, BSKS, BSKG



Traditional lever handle set



Plain lever handle set

INSTALLATION INSTRUCTIONS

1. Drill 2 x 9mm (3/8") holes at 140mm (5 ½") centres for fixing bolts provided.
2. Drill a 18mm (¾") clearance hole for the latchbolt at 60mm (2 3/8") centres up from the bottom fixing hole.
3. Hold the lock against the back of the box section and screw on the latchbolt through the larger hole. Fixing the lock in place using the stainless steel bolt support plate and the countersunk screws provided. Ensure the latchbolt moves freely.
4. Lock the latchbolt with the hex key supplied by inserting the hex key into the end of the latchbolt.
5. Fix the strike plate/keep to the gate post, ensuring the latchbolt engages fully when the gate is closed and cannot be accessed or manually retracted through the gap between the gate and post.

Step 1 & 2:

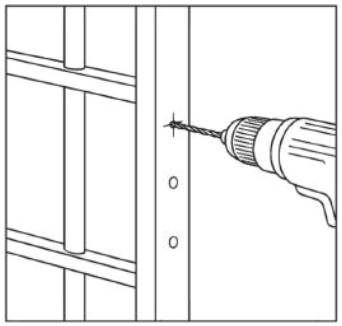

Step 3:

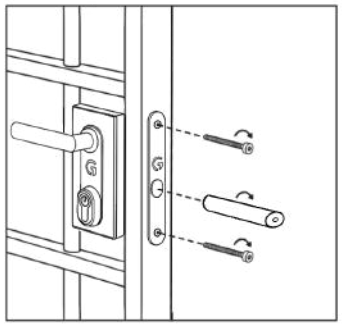

Step 4:

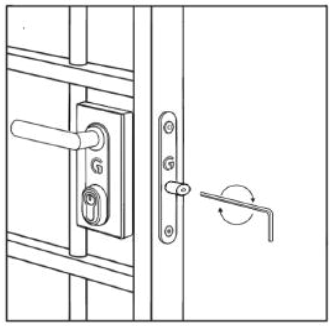

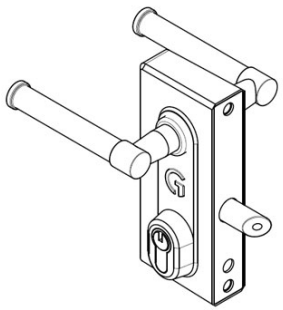

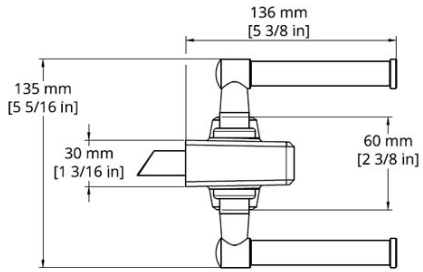

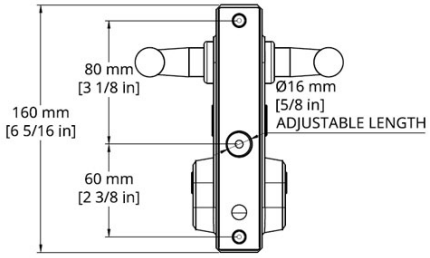

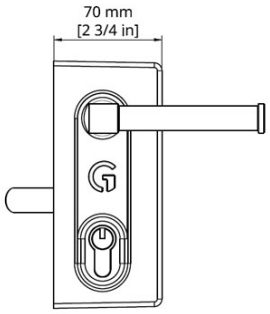

MAINTENANCE

© Copyright Gatemaster 2026

Every 6 months:
Lubricate the latchbolt with light oil.

Annually:
Dismantle the lock and spray mechanism with light oil.

COMPATIBLE PRODUCTS

To help improve gate security and overall performance, The Superlock 2.0 can be paired with a range of Gatemaster products. These options are designed to work alongside your gate lock, helping create a stronger, safer and more complete gate installation.



Superlock Secure Keep (BSK)

- Designed to enhance gate security by preventing access to the latchbolt.
- Slim, low-profile design provides a sleek, modern appearance that improves the overall look of the gate.
- Versatile, simple, and easy to install, suitable for a wide range of gate and fencing applications.



Superhinge (SH)

- Tested for over 500,000 gate openings without any sign of wear, equating to approximately 50 years of daily use at 25 gate openings per day.
- Capable of supporting gates weighing up to 900kg.
- Ideal for both automated and manual gates.
- Available in multiple sizes with adjustable installation options and corner-lug variations.

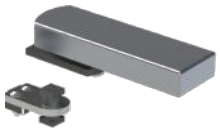

Hydraulic Gate Closer (APS)

- Provides safe, reliable gate closing using a proven hydraulic mechanism, ideal for schools or playgrounds.
- Designed to support gates up to 150kg.
- Available with either a standard top hinge or an integrated 90° stop, offering a durable, unobtrusive, and maintenance-free solution.
- Requires no power.